BMP 1

Access Roads, Skid Trails, and Landings

Purpose

The purpose of this BMP is to construct and maintain roads, skid trails, and landings in a way that minimizes soil erosion and protects nearby bodies of water from sedimentation.

Definitions

Access roads connect silvicultural operations, including timber-harvesting operations, with the farm or public road system. In the case of timber harvesting, access roads are commonly referred to as **haul roads** and carry log trucks from the landing to the farm or public road system. **Skid trails** are secondary vehicle travel routes through the forest used to remove harvested timber from a point near where trees were felled to an access road or concentration area. They are generally temporary, minimum or nonstructural pathways over forest soils, where felled trees or logs are dragged, resulting in duff and ground disturbance. **Cable corridors**, narrow corridors used in cable yarding operations, and **forwarding paths** are also used for moving felled trees or logs from their point of origin to a concentration area. **Landings, log decks,** or **yards** are concentration areas where harvested forest products are temporarily concentrated and stored before being permanently removed from the woods.

These trafficked areas are used where needed to provide access from the public or private transportation system to the forest activity area and trees within the area. The intended purpose of these areas will dictate the construction standards (high standards for permanent use or lower standards for temporary use), and the type, placement, and timing of construction of water control structures used to control erosion.

Specifications

Access Roads

General Layout

Topography, property lines, economic constraints, and sensitive areas in the landscape often dictate approximate location and extent of the road system. Common sense in applying guidelines to a specific situation is vital. The end result of these combined efforts is to keep the forest soil in place for future production of forest products and maintenance of water quality and aquatic habitat, while providing for safe and efficient silvicultural operations.

Control points: Control points, such as rock outcrops, ledges, swampy places, and other features likely to present difficulties in construction, should be avoided, if possible. While soil survey information and topographic maps are helpful in defining these areas and other similar features that may be present, a thorough walk-through prior to construction is often required to adequately identify these control points.

General Construction Considerations

- If possible, roads should be properly constructed, seeded and armored (if appropriate) several months in advance of their use to allow for settling. This normally reduces maintenance and increases surface stability.

- A right-of-way of sufficient width to handle the equipment using the road should be cleared.
- Merchantable timber should be removed before construction.
- The radius on curves should be sufficient for trucks to negotiate easily.
- All cuts and fills should have side slopes that are stable for the soil or fill material involved.
- Equipment should not be operated off hard-surfaced roads under conditions that can cause the development of excessive rutting.

Grade

It is desirable and economical to keep vertical grades as low as possible and compatible with topography and property lines. Slippage of equipment can cause rutting, which can accelerate erosion and result in increased concentrated flows of sediment-laden water. Grade is positively related to slippage and should be controlled to reduce slippage.

Where possible, access roads should not exceed a grade of 15 percent except for short stretches of 200 feet or less where grades should not exceed 18 percent.

Drainage

Proper drainage is the single most important factor in controlling soil erosion and keeping a road in serviceable condition. Use of drainage techniques, such as outsloping and/or the use of drainage control structures, should be completed to reduce or eliminate rill and gully erosion of the road surfaces. Techniques should also be implemented so as not to cause similar erosion to the relatively undisturbed forest floor adjacent to the road. Appendix 1 in this BMP contains specifications for drainage structures.

Outsloping

Outsloping is a drainage technique where the entire width of the road is gently sloped toward the downhill or fill bank side of the road. This technique reduces the number of drainage control structures necessary and is an effective way to drain the road surface. However, out-sloped roads can be dangerous on some soils when wet or frozen.

A recommended slope for this type of road is ¼ inch per foot or a 3-inch drop per 12 feet of road.

Crowning and Turnouts

Access roads on relatively flat areas can be drained by crowning or raising the center of the roads and allowing runoff to be shed to either side onto the forest floor or into a roadside ditch. Runoff can be drained from the ditch using turnouts. Turnouts are a continuation of the ditch angled away from the road for a sufficient distance to allow runoff to dissipate onto the undisturbed forest floor. Generally, turnouts should be angled 30 degrees from the road. Keep turnout lengths to a minimum. Turnout spacing should be consistent with Table 1-1.

Drainage Control Structures

Drainage control structures are carefully constructed outsloping sections of the road that act as a water catchment and drainage channel. Use of drainage control structures, such as open or closed culverts and reverse grade structures, such as dips or water breaks, are the most common and practical methods of draining roads. Exhibits, recommended specifications, and information on culverts and reverse grade structures are included in Appendix 1 of this section. This information will help determine which structure should be used in a specific situation. General recommendations for drainage control structures include:

- **During the operation:** Heavy short-term trafficking of roads normally occurs. Proper construction and maintenance of drainage structures is critical during this time period.
- **Running water:** Culverts, either open or closed, should be used to handle running water instead of reverse grade structures.
- **Ephemeral channels:** These channels carry water during or directly after precipitation events. Blockage of ephemeral channels should be avoided where possible.
- **Permanent road use:** If permanent use of the road is anticipated by the landowner, it is desirable to install culverts of corrugated plastic or metal and/or concrete pipe or to armor and reconstruct reverse grade structures to facilitate permanent trafficking.

Drainage Control Structure Intervals

Drainage control structures should be installed at intervals appropriate to remove water from the road's surface to prevent damage and eliminate or reduce rill or gully erosion to the road or the forest floor from channelized flow. The grade of the road, soil type and moisture, and intensity and type of trafficking influence how much erosion can potentially occur on a road. Table 1-1 provides general recommended intervals for drainage control structures based on percent road grade. However, these intervals should be altered when necessary to accommodate erosive soils, microtopography features, and hydrologically active control points, such as seeps or springs.

Table 1-1—Recommended Distances between Drainage Control Structures for Access Roads

Road Grade (%)	Spacing (slope distance in feet)
2-5	300-500
6-10	200-300
11-15	100-200
16-18	100

Note: Deviations from these recommendations may be appropriate depending upon the nature of the road surface material and its tendency to erode.

Stream Crossings

Points where streams and roads intersect or where roads come in close proximity to streams have the potential to deliver sediment-laden runoff into the streams. Several general recommendations can help reduce water quality problems.

Stream Avoidance

Roads should be located as far from a stream as is practical. See BMP No. 3 "Streamside Management Zones" for recommended distance between roads and streams. Stream crossings should be avoided if possible. If a stream must be crossed, it should be crossed at right angles where possible.

Crossings

When crossings are unavoidable temporary bridges or culverts are preferable. A bridge should not be constructed if a crossing can be avoided by an alternate road location or can be constructed by less expensive means, such as a culvert.

Bridges and culverts: Where feasible, install and use bridges or culverts to cross streams (perennial and intermittent) and ephemeral channels. Where bridges or culverts are not used, roads should cross streams and ephemeral channels at right angles. Bridges should be located to cross streams at right angles to the stream and should not interfere with natural stream flow. Piers and abutments should be parallel to the direction of stream flow and should be embedded in good foundation material. The grade of the bridge should coincide with that of the road. The bridge material and design should be adequate for safety and the intended use of the bridge. Native tree species are suitable materials in most bridges that need to be constructed for timber-harvesting operations. Exhibits, recommended specifications, and information on bridges and culverts are included in Appendix 1 of this BMP. This information will help determine which structure should be used in a specific situation.

Fords: Fords should be graveled on each side where significant soil disturbance can occur. The road should be drained to prevent water from running down the road into the stream during high flows. Fill areas and disturbed banks in the vicinity of stream crossings should be stabilized promptly.

Low-water crossings: Where road construction requires low-water stream crossings, the Division of Water has developed a standard design that is typically acceptable for issuance of a floodplain permit. This design is available upon request. See the "Streams and Other Waters" section of the *Agriculture Water Quality Authority Producer Workbook* for further details.

Maintenance

Access roads, skid trails, and landings should be maintained to adequately control or significantly abate soil erosion. Maintenance of access roads to control erosion is basically a problem of water control. This requires a properly functioning drainage system and maintenance to keep the road reasonably free of ruts, berms, and debris that prevent water from flowing freely off road surfaces.

If an access road is to remain open after the removal of timber, it is advisable to keep travel to a minimum unless the surface material permits all-weather use. Periodic inspections should be performed and maintenance work done as needed.

It is impossible to control erosion if unsurfaced roads are used during excessively wet weather. Problem areas having steep road grades and wet areas should be logged during the most favorable weather. Inspection of road surfaces and drainage control structures is necessary during the operation.

Road surface: Maintenance of road surface is accomplished by grading where necessary to minimize rutting. Berms developed during trafficking should be removed to allow proper drainage and decrease erosion.

Reverse grade drainage control structures: Inspection of reverse grade structures, such as water breaks, must be done often. Reconstruction and armoring of drainage control structures may be necessary to insure proper structure function.

Culverts: Inspection of both open and closed culverts is necessary. Removal of materials from the inlet of closed culverts is often necessary. Check midsections for blockage and outlets for the development of rill or

gully erosion. Rocks or other materials can be used to dissipate water flowing from culverts. Open culverts should be cleaned when necessary.

Retirement

If an access road is not to be kept open, it should be retired after completion of forest activity by smoothing and shaping road surfaces and road banks and revegetating and removing any stream crossing structures. The following guidelines should be implemented to insure proper retirement:

- **Roads should be revegetated as soon as is practicable.** See BMP No. 2 "Vegetative Establishment on Silviculturally Disturbed Areas" for recommended seeding mixes and cultural treatments.
- **Control vehicle access** on revegetated access roads until cover is established and control structures have settled.
- **Open culverts** should be removed and replaced with closed culverts or reverse grade structures. These structures should be of sufficient size to carry maximum runoff to prevent them from being washed out. See "Pipe Culvert" specification. Outsloping can also be used for the retirement of access roads.
- **Ephemeral channels** should be cleared of disturbed soil.

Skid Trails

Provisions must be made in a timber harvesting operation for the moving of products from stumps to landings or concentration yards. Skid trails, primarily those that carry enough traffic to remove the duff layer and disturb the soil surface, have the potential to erode. Low-use secondary skid trails and skid paths that support only one or a few turns do not normally have a large amount of disturbed soil or duff and are less prone to erosion. Considerable soil erosion can be prevented and lower skidding costs will result from a well-designed primary skid trail system. Cable corridors, where the lack of proper deflection allows felled trees or logs to drag, and forwarding paths should also be planned to avoid water quality problems.

Layout and Construction

Skid trail layout is affected by many of the same factors that influence the layout of roads. Topography, property lines, economic constraints, equipment limitations, and sensitive areas in the landscape often dictate approximate location and extent of the skid trail system. Common sense in applying guidelines to a specific situation is vital. The following guidelines will help facilitate skid trail construction:

- **Grades:** Keep skid road grades as low as topography will permit. Do not go straight up the slope but proceed on a slant or zig-zag path. Break the grade occasionally and avoid long, steep slopes.
- **Ephemeral channels:** Keep the number of such crossings to a minimum. Where possible use culverts,temporary bridges, or other structures at ephemeral channels.

Drainage and Maintenance

While permanent drainage control structures normally cannot be constructed while skidding is underway, drainage of active skid trails is still important.

- **Berms** allowing excessive ponding on skid trails should be periodically removed to allow adequate drainage.
- **Skidding over wet soils** can cause excessive rutting and should be avoided if possible. Excessive rutting can be practically defined as a depth exceeding the ability of the available equipment to resurface the trail.
- **Bank seeps** need drainage control structures (which can be skidded across) immediately below them.
- **Extra steep skid trails** need drainage control structures (which can be skidded across) immediately above them.
- **Temporarily unused trails** need to have drainage control structures constructed if inactive for an extended period of time to prevent rill and gully erosion.

- **Maintenance of skid trails** during harvesting operations consists chiefly of maintaining an effective drainage system to control or significantly abate soil erosion.

Stream Protection

Skidding in streams: In no case should stream beds be used as roads or for the skidding of logs except where the geology or other physical conditions of the site (rock walls, notches, or other limiting factors) leave no other alternatives for access, or where road or skid trail placement in normally recommended locations is either impossible or will cause a higher degree of water quality degradation. If an exception due to physical site conditions is necessary, stream channels may be used as roads or for skidding only for the minimum distance required.

Stream crossings: Minimize the number of stream crossings. Where crossings are needed, install and use bridges or culverts to cross streams (perennial and intermittent) and ephemeral channels. Where bridges or culverts are not used, skid trails should cross streams and ephemeral channels at right angles.

Table 1-2—Recommended Distances[1] between Water Bars for Retirement of Skid Trails

Skid Trail Percent	Spacing (slope distance in feet)
1	400
2	245
5	125
10	78
15	58
20	47
25	40
30	35
35	32
40	29

1 Actual distance between water bars will depend upon the nature of the road surface material, its tendency to erode, and hydrologically active areas, such as seeps.

Retirement

On completion of the skidding operation or a seasonal shutdown, the following steps should be taken to prevent erosion:

- **Water bars and outsloping:** Install drainage control structures, normally water bars (a reverse grade structure developed specifically for skid trail retirement). Exhibits, recommended specifications, and information on water bars are included in Appendix 1 of this BMP. Outsloping of the skid trail can also be used to minimize or permanently eliminate rill or gully erosion. See Table 1-2 for recommended intervals between drainage control structures to provide for drainage and skid trail erosion control.
- **Stream crossings:** At stream crossings, the stream beds should be cleaned of debris and restored to natural shape and grade.
- **Revegetation:** Skid trail sections having bare soil (primary skid trails) should be revegetated in a manner similar to access road retirement. See BMP No. 2 "Vegetative Establishment on Silviculturally Disturbed Areas" for details.
- **Ephemeral channels:** Remove disturbed soil or concentrated logging slash from ephemeral channels.
- **Access:** Access must be controlled or restricted on retired trails to allow settling and revegetation.

Landings And Concentration Yards

One of the most important decisions that will influence the ability of the operation to adequately control sediment-laden runoff from the road and skid trail system is the location of the landing. All roads and trails intersect at the landing. Poor landing location can lead to difficulties in the placement and construction of roads and skid trails with regards to controlling pollution from sediment-laden flows. Identification of streams and other waters should be made before establishing the landing. Placement should be made as far from streams and other waters as practical.

Construction, Maintenance, and Drainage

- **Landings should be sloped** to allow sufficient water drainage. A recommended slope for this is at least 1/4 inch per foot or a 3-inch drop per 12 feet of landing.
- **Approach roads** should have adequate drainage so that road drainage does not enter the landing area.
- **Seepage and lateral flow** that move onto landings should be diverted with appropriate ditching on the upslope side of landings to prevent erosion, rutting, and runoff problems.
- **Maintain landings** to adequately control or significantly abate soil erosion.

Stream Protection

Yards and landings should be located outside of Streamside Management Zones (SMZs) where possible. See BMP No. 3 "Streamside Management Zones" for detailed recommendations.

Retirement

After silvicultural activities are completed, log landings should be promptly reshaped, revegetated, and retired.

Revegetate landings and yards immediately following completion of activity. See specification for "Vegetative Establishment on Silviculturally Disturbed Areas."

Regulatory Requirements for BMP No. 1

(See Appendix A for descriptions)

- Construction in floodplains: (KRS 151.250)
- Filling or draining of wetlands: (U.S. Clean Water Act, Section 404)
- All silvicultural operations: (410 KAR 5:026, 5:029, 5:030, and 5:031)
- Activities near high quality waters and outstanding national resource waters: (401 KAR 5:029, 5:030, and 5:031)
- Activities near wild rivers: (KRS 146.200 et seq. and 401 KAR 4:100-140)

Summary: AWQA Minimum Requirements for BMP No. 1

The producer should:

- not operate skidders or other logging equipment off hard-surfaced roads under conditions that may cause the development of excessive rutting. Excess rutting is defined as a point where ruts cannot be resurfaced with available equipment.
- construct roads and skid trails so that grades are kept to a minimum. When possible, access roads should not exceed a grade of 15 percent except for short stretches of 200 feet or less where grades should not exceed 18 percent.
- install water bars, culverts, or other drainage structures at intervals appropriate to remove water from the road or skid trail to prevent damage and erosion to the surface of the road, trail, or the forest floor from channelized flow.
- use or install bridges or culverts to cross streams (perennial or intermittent) or ephemeral channels where feasible.
- cross streams or ephemeral channels at right angles where bridges or culverts are not used.
- not leave disturbed soil or concentrated logging slash in ephemeral channels.
- locate yards and landings outside of streamside management zones (SMZs) and ensure they have adequate drainage (see minimum requirements of Silvicultural BMP No. 3).

Appendix 1
Specifications for Drainage Structures and Bridges

Drainage structures include:

- Reverse grade structures (broad-based dips, water breaks)
- Culverts (open and closed)
- Crowning and turnouts
- Outsloping

Reverse Grade Structures

General Applications

These structures are constructed directly into the road or skid trail base using the soil from the road or trail surface. They are designed to stop the downgrade movement of water along a road surface and release the concentrated flow onto the undisturbed forest floor. They generally should not be used when running water from uphill sources, such as that associated with ephemeral channels, crosses the road. In these cases culverts or bridges should be used. Several common names exist for reverse grade structures, including water bars, waterbreaks (both shallow and deep), and broad-based dips, to name a few. Water bar and deep water break are the names commonly used for reverse grade structures used to permanently retire skid trails. Shallow water breaks and broad-based dips are designed to be trafficked during a harvesting operation or as part of forest management activities. Reverse grade structures are used for three different applications:

- **Access Roads:** Used to support log truck traffic.
- **Permanent Access Roads:** For use after the harvesting operation where medium-weight vehicles will need to be supported.
- **Skid Trail and Road Retirement:** For the closing of trails and roads that will not be trafficked.

The exact dimensions for these structures will depend on the application for which they are being used as well as the soil conditions, installation equipment, trafficking requirements, and microtopography. While the dimension of these structures can vary, they all contain three components as shown in Figure 1-1.

Figure 1-1. Typical Reverse Grade Structure

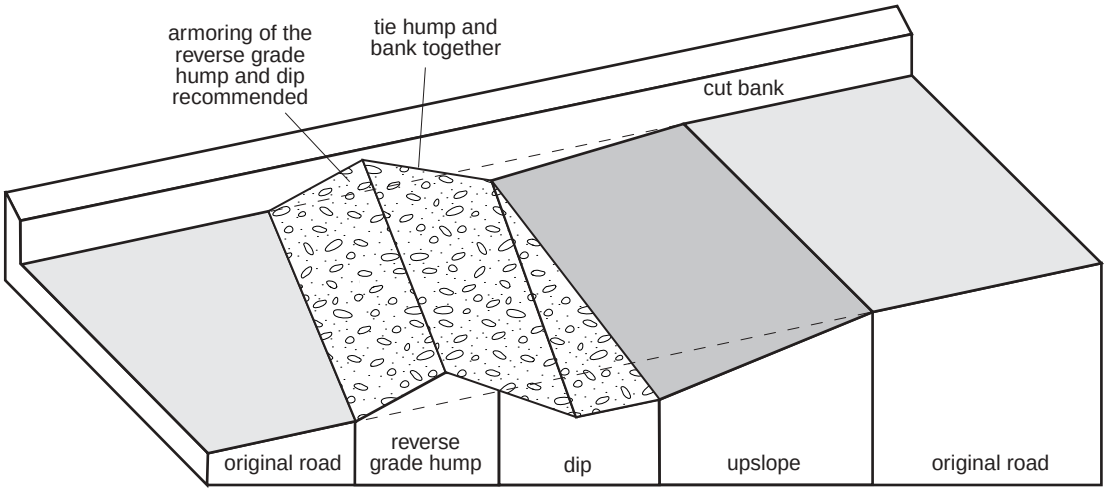

The **dip** is constructed below the level of the original grade of the road. The bottom of the dip is normally slanted downgrade to ensure that the outlet side is lower than the side tied to the cut bank or upslope side of the road or trail. Slanting of the dip across the road ensures that the outlet side is lower than the inlet or uphill side. The slant or angle of the dip depends on the application for the control structure.

The **hump** is constructed tall enough to maintain itself during hauling. For reverse grade structures used on retired skid trails, the hump must be tall enough to withstand off-road vehicle traffic. It should also be long enough to allow the safe movement of loaded log trucks. Note that the base of the hump is actually below the original grade of the road or trail. This normally provides a relatively compact soil at the bottom of the hump, helping it to withstand the erosive force of the water moving through the dip.

The **upgrade section** can be constructed over a distance long enough to facilitate movement of loaded log trucks, or it can be almost nonexistent in the case of such structures as water bars for the retirement of skid trails.

Providing Adequate Out-flow Protection

Care should be taken to ensure that there is adequate drainage at the outflow of the dip and that there is an adequate buffer zone to allow filtering of the discharge. The discharge area should be protected with stone, grass sod, heavy litter cover, brush, logs, or anything that will reduce the velocity of the water. Natural litter may be adequate in many cases if the terrain is not too steep. In cases were an adequate buffer zone is not available, sediment traps should be used. These can take several forms, such as small narrow sediment impoundments, consisting of 1- to 3-foot wide and deep trenches, or silt fences or barriers. These must be checked and maintained.

Specific Applications

Access Roads

In this application the structures are used for controlling runoff during the harvesting operation. The exact design must be capable of supporting truck traffic during the harvesting operation, as well as consider the available installation equipment, soils, and microtopography. In all cases structures used for this application must be checked at frequent intervals and repaired when necessary. Failures usually occur because of rutting of the dip and hump.

Armoring reverse grade structures with crushed rock or gravel is helpful in increasing the life and effectiveness of the structure.

Gentle grade: Some specific design criteria have been developed for reverse grade structures for access roads, such as the broad-based dip. These design criteria were developed to support safe and efficient movement of large tandem axle and tractor-trailer trucks and to insure mitigation of erosion from the road surface. They do not increase wear on vehicles or significantly reduce hauling speed when properly installed. Recommended specifications are shown in Figure 1-2.

This particular structure is long and as such is limited to relatively low-grade roads (less than 10 percent). Constructing a reverse grade structure to these criteria on grades greater than 10 percent causes an increase in the grade of the road directly below the structure, which can result in trafficking problems.

Figure 1-2. Reverse Grade Structure for Large Trucks.

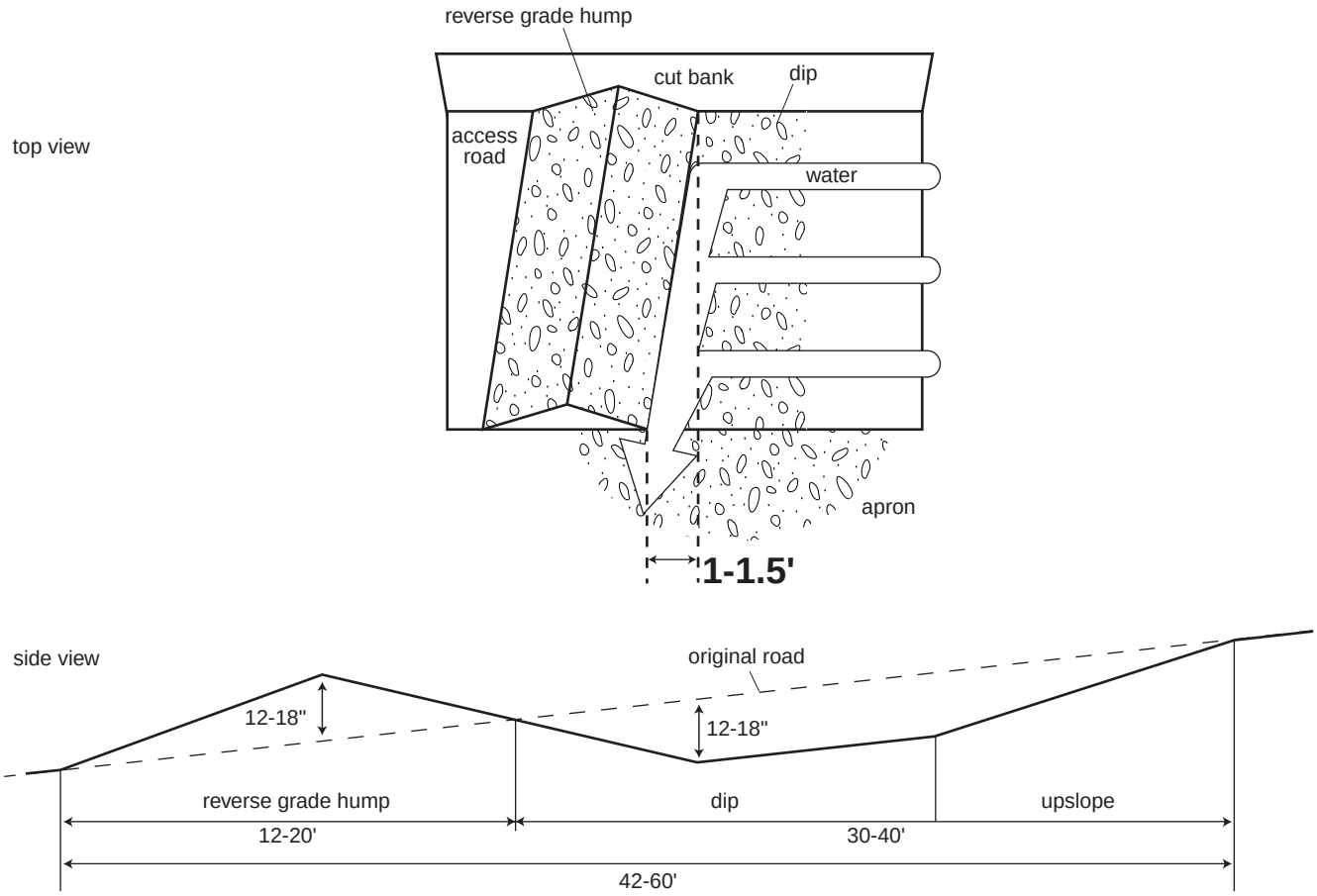

Note: These drawings are not drawn to scale.

Steep grade: As road grades increase more than 10 percent, generally a shortening of the structure is needed. Both the upgrade section and the hump need to be shortened without sacrificing the integrity of the dip and hump. Figure 1-3 provides general dimension recommendations for reverse grade structures for roads with grades more than 10 percent:

Figure 1-3. Reverse Grade Structure Used on Steeper Grades

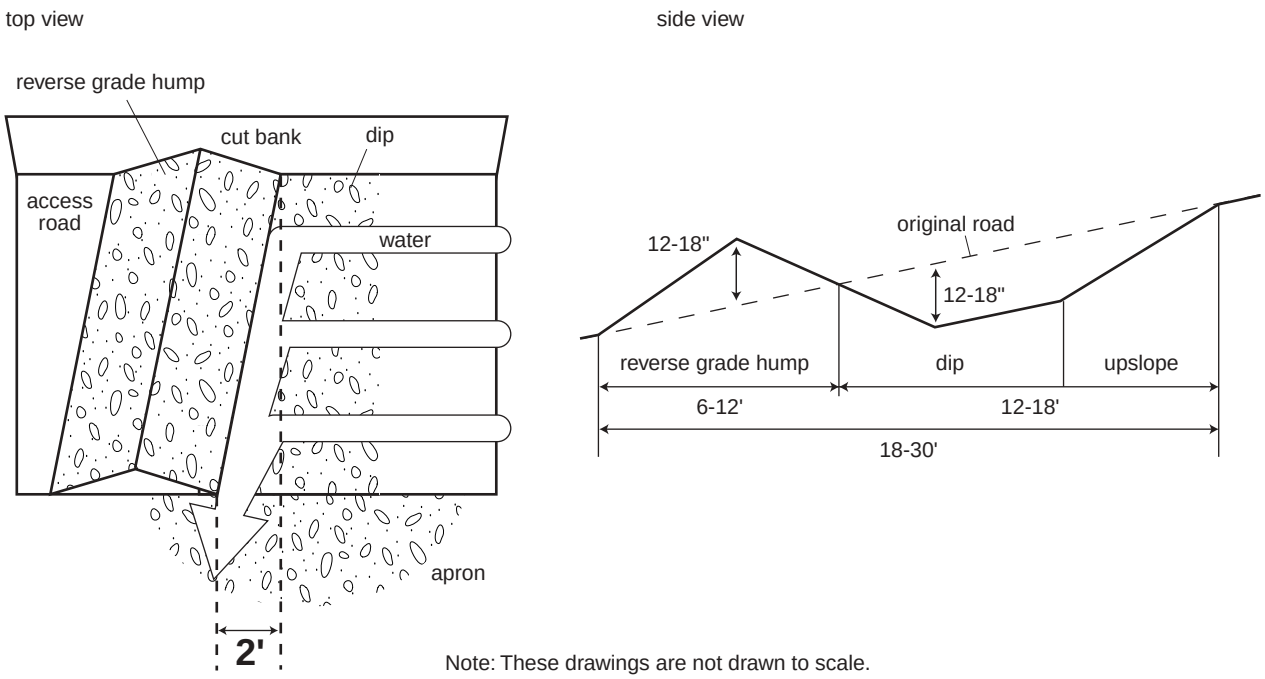

Note: These drawings are not drawn to scale.

Permanent Access Roads for Use after the Harvesting Operation

For this type of use, reverse grade structures must control runoff from woods roads that will be permanently used for light traffic, such as pickup trucks, ¾ ton vehicles, or farm tractors and wagons. Figure 1-4 shows recommended specifications for this application.

Figure 1-4. Reverse Grade Structure for Light Traffic (Water Break Structure)

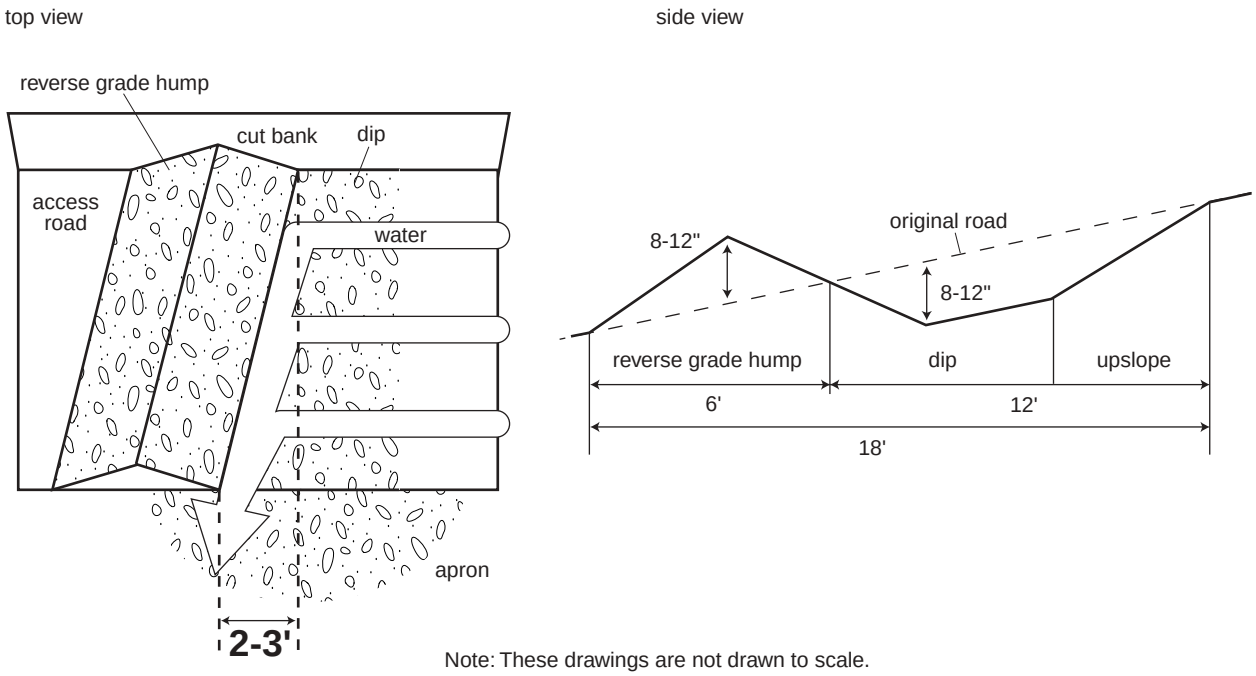

Note: These drawings are not drawn to scale.

Skid Trail and Road Retirement—Water Bars

For permanently controlling runoff on trails and roads that will not be trafficked, the deep water break or water bar is normally recommended. The dimension of these structures, having a pronounced hump, usually precludes the trafficking by most vehicles. Appropriate design criteria are shown in Figure 1-5. It is difficult to construct to these specifications with a wheeled skidder; bulldozers are most commonly used. It is best to start at the end of the road or trail and work out so that the breaks are not damaged by frequent crossing of machinery.

Figure 1-5. Reverse Grade Structure for Skid Trail Retirement (Deep Water Break or Water Bar)

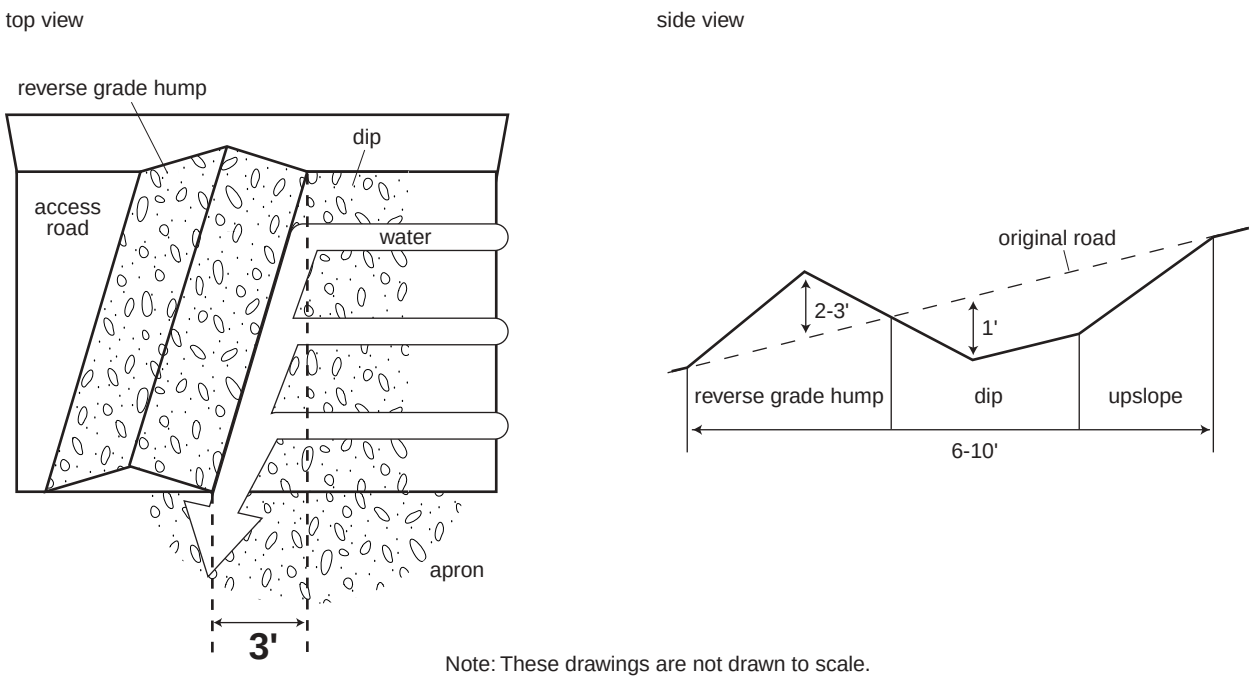

Note: These drawings are not drawn to scale.

As a **supplement** to water breaks, logging slash can be lopped, scattered, and must be embedded and/or grass planted on roads and trails that will be closed. Water breaks should be installed at about a 30-degree angle down slope. The outflow end of the water break must be open to keep water from accumulating and be protected by a buffer or filter zone to clean the sediment out of the water and prevent erosion.

Skid Trail and Road Retirement—Skidder Bars

Deep water bars are designed to be installed with a dozer. Often when wheeled skidders attempt water bar construction, critical design criteria can not be met. The **skidder bar** has been designed as an an alternative structure. Figure 1-6 shows the sequence of pushes used to create the skidder bar as well as the design specifications.

This structure is developed from a series of 1- to 2-foot tall piles. These piles are developed by the skidder scraping surface soil. Do not attempt to dig the dip below the hard packed surface of the trail. Overlapping the piles is critical to prevent leakage. The final push clears the berm to allow drainage.

Figure 1-6 Skidder Bar Construction.

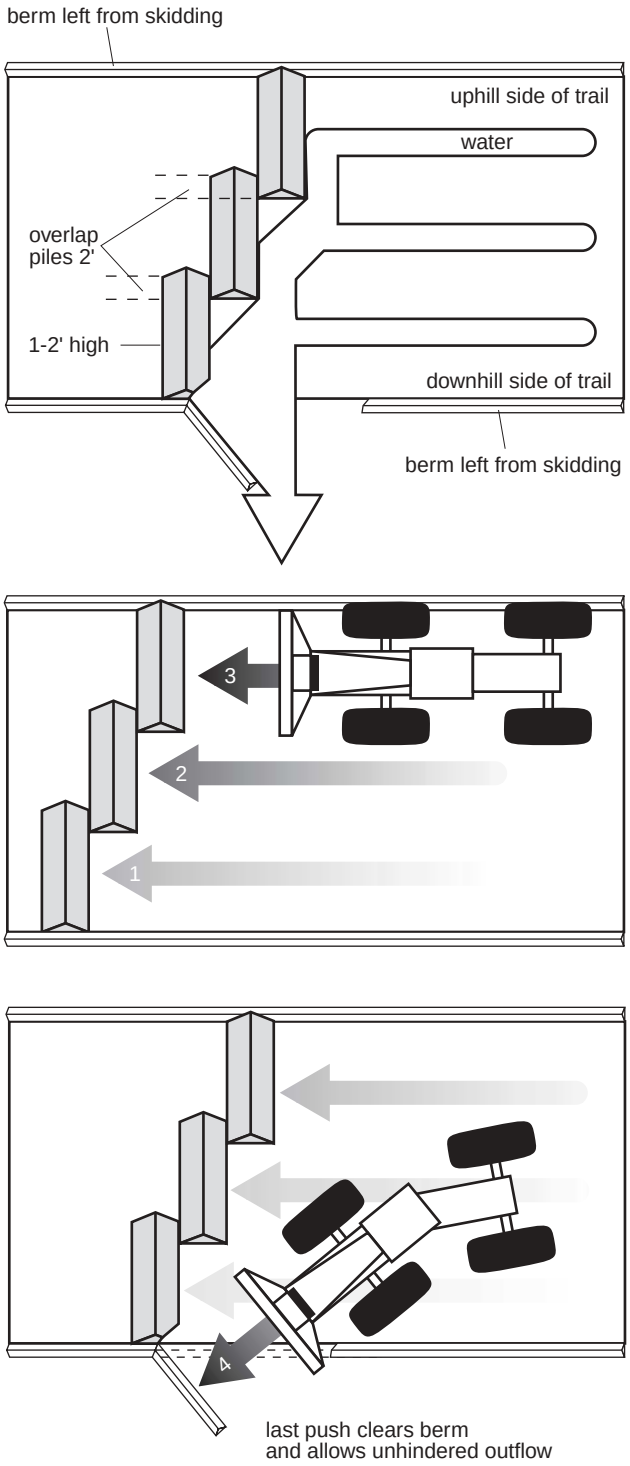

Culverts

Culverts are both open-faced and closed. Closed culverts include the use of pipes and hollow logs. Open-faced culverts are open to the air and are constructed from wood or cement.

Closed or Pipe Culverts

Closed culverts include the use of the following materials:

- Metal pipes (normally corrugated pipe)
- Plastic pipe (both single-walled [corrugated] and double-walled [smooth on the inside])
- Cement
- Hollow logs

Pipe culverts are used for the following two applications:

- To channel water under roadways from uphill drainages, such as ephemeral channels, seeps, and small streams (metal, plastic, and hollow logs can be used for this application)
- As a drainage control structure on a road to handle runoff associated with the road surface and the cut bank (metal and plastic pipes are recommended for this use).

Drainage of Active Uphill Water

A culvert inlet should be placed on the drainage level and as near as possible to natural drains including ephemeral, channels and intermittent, or perennial streams (Figure 1-7). In some instances, where the culvert level has to be lower than the drainage gradient, a drop box can be constructed. This box is a place for sediment to settle out and needs close maintenance.

Figure 1-7. Closed Culvert in a Ephemeral Channel

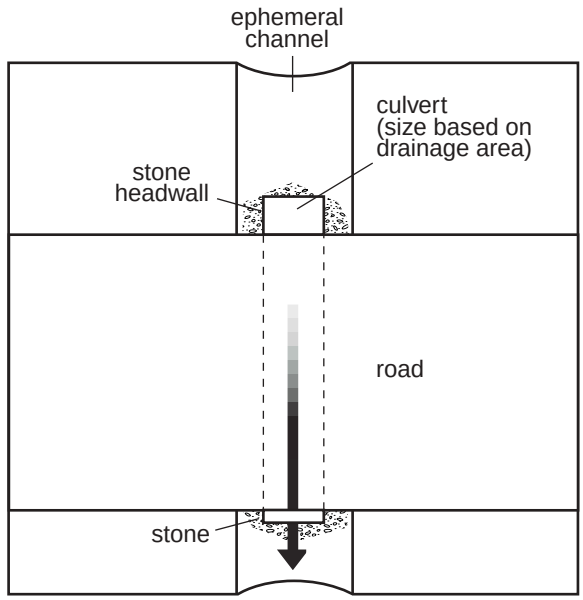

Table 1-3—Recommended Pipe Diameters for Streams and Ephemeral Channels

Area above Pipe (acres)	Recommended Pipe Diameter (inches)
2	12
4	15
7	18
12	21
16	24
27	30
47	36
64	42
90	48
120	54
160	60
205	66
250	72
350	78

During construction, place the culvert on firm ground and compact the earth at least halfway up the side of the pipe to prevent water from leaking around it. Adequate cover is needed; the rule is a minimum of one foot or one-half the culvert diameter, whichever is greater. If adequate cover cannot be achieved, then an arch pipe (squashed pipe) or two smaller culverts should be installed. The cover must also be compacted to prevent settling in the road. If erosion of the inlet end is a problem, a head wall must be provided. Sandbags, with some cement mixed with the sand, durable logs, concrete, or hand-placed riprap are suitable. The length of the culvert on the outlet end should be sufficient to avoid washing fill.

It is suggested that 12-inch pipe be the smallest used. Table 1-3 shows the culvert diameter recommended for particular drainage areas. These recommendations apply for shallow soils with frequent rock outcrops.

A Special Note on Hollow Logs

Hollow logs can be used for this application. However, they will have a shorter life span than metal or plastic and should not be used in a permanent situation. The following guidelines will help extend the life and effectiveness of hollow logs:

- **The butt or bottom end** of the log should be placed downstream, which will avoid premature obstruction within the log.
- **Use several logs** if possible to increase the capacity and allow flow if one becomes obstructed.
- **Provide adequate soil coverage** to avoid collapse under normal traffic conditions.
- Use **oversized** logs relative to the size recommended for metal or plastic culverts.

Culverts for Road Drainage

Closed culverts can be used as drainage control structures on roads (Figures 1-8 and 1-9). Particular attention should be given to culvert depth. A box made from natural stone can be used to help keep the inlet end of the culvert open. Do not allow the outlet end of the culvert to extend more than one foot beyond the edge of the road. Extension of culverts may cause outlets to be excessively high. This may accelerate erosion of the forest floor. Natural stone can be used to mitigate this erosion.

Figure 1-8. Closed Culverts for Road Drainage.

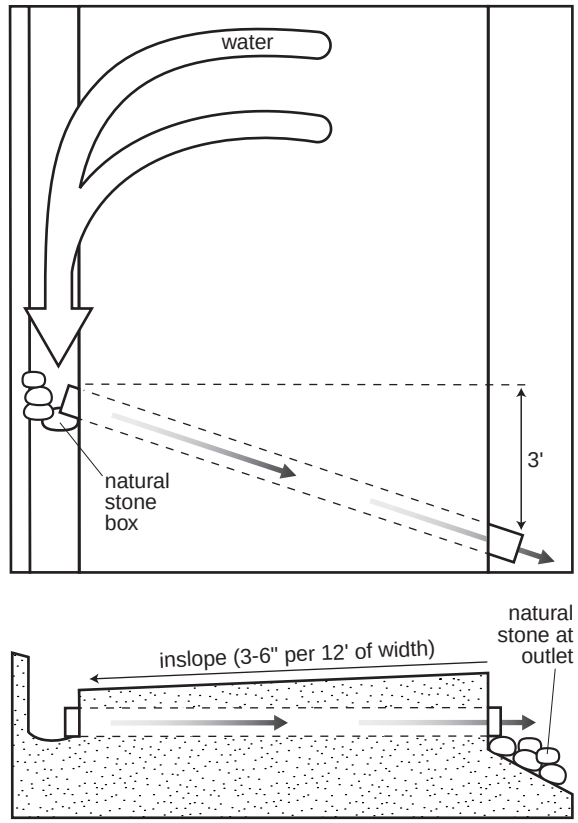

Figure 1-9. Cross-Sectional View of a Closed Culvert.

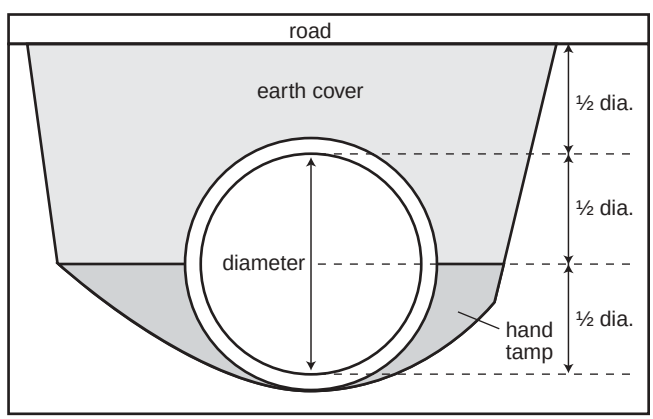

Open Top Culverts

This type of culvert is used on low-cost logging roads and is usually constructed from lumber logs (pole culverts, Figure 1-10) or lumber (box culvert, Figure 1-11). They can fill quickly when used on a newly disturbed access road where trafficking is high. They are less prone to fill when placed in roads that have settled. They are advantageous for forest owners because they can be constructed and installed by hand. When properly installed and maintained, these culverts will adequately drain small sources of water, such as seeps and springs. Log skidding tends to damage and plug them up, making them ineffective for water control on skid trails. Box culverts can also be damaged by bulldozer cleats. They must be cleaned frequently, even on haul roads, to be effective. Open top culverts should be installed at a 30-degree angle downgrade.

As with other water diversion methods, the discharge area should be protected to prevent erosion and enable sediment to settle out. See Table 1-1 for recommended distances between open top culverts on access roads.

Figure 1-10. Overhead View of Pole Culvert Showing Spacers

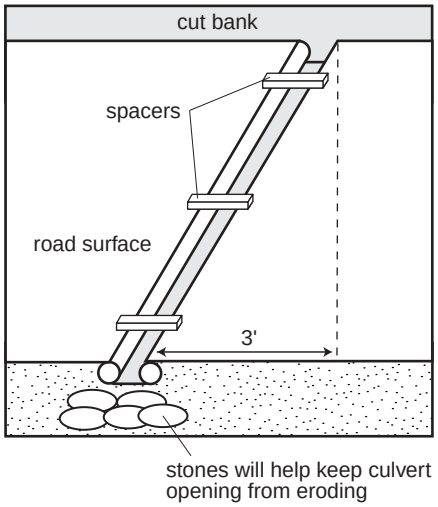

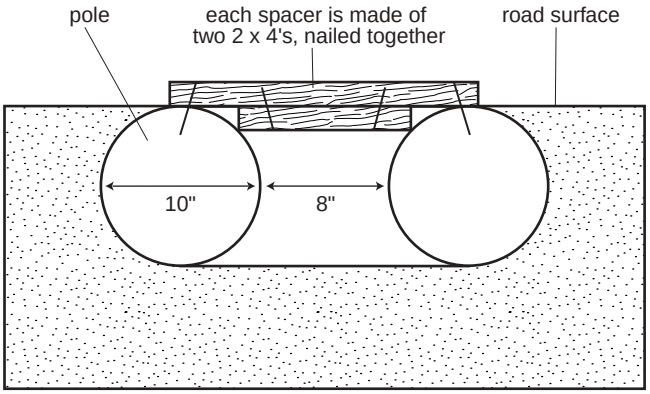

Figure 1-11. Box Culvert

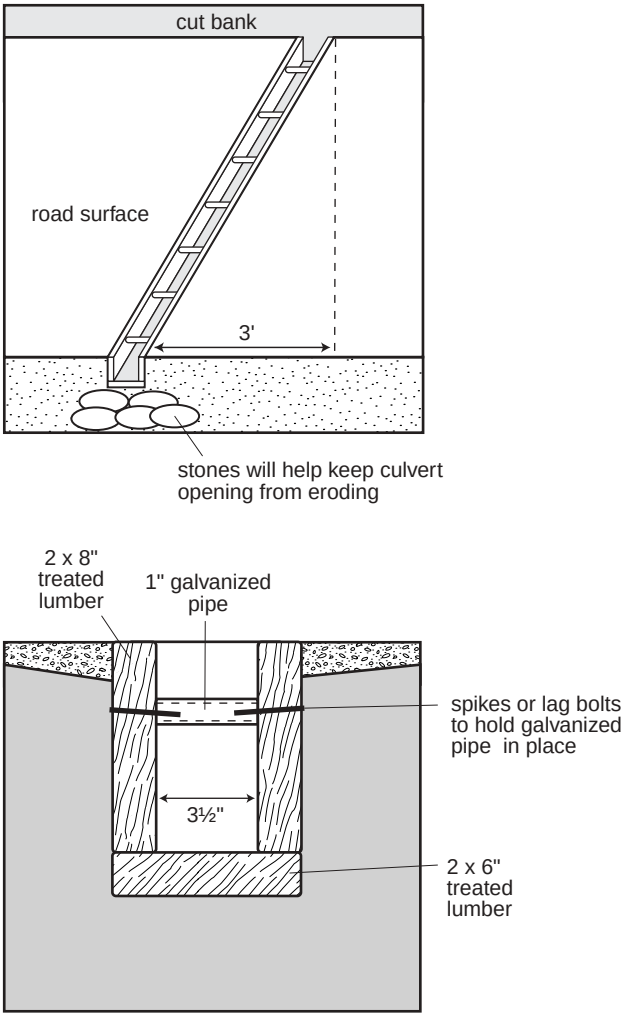

Bridges

Bridges are excellent choices for minimizing nonpoint source pollution associated with crossing both perennial and intermittent streams, as well as ephemeral channels. Bridges have been made out of a variety of materials, and some commercially available portable bridges can be used effectively for skidding. Figure 1-12 shows the design criteria that can be used for a bridge made from small-diameter logs. As with all bridges, the integrity and the safety associated with the approach is critical, as well as the ability to maintain traction when the surface is wet or frozen.

Figure 1-12. Temporary Log Stringer Bridge